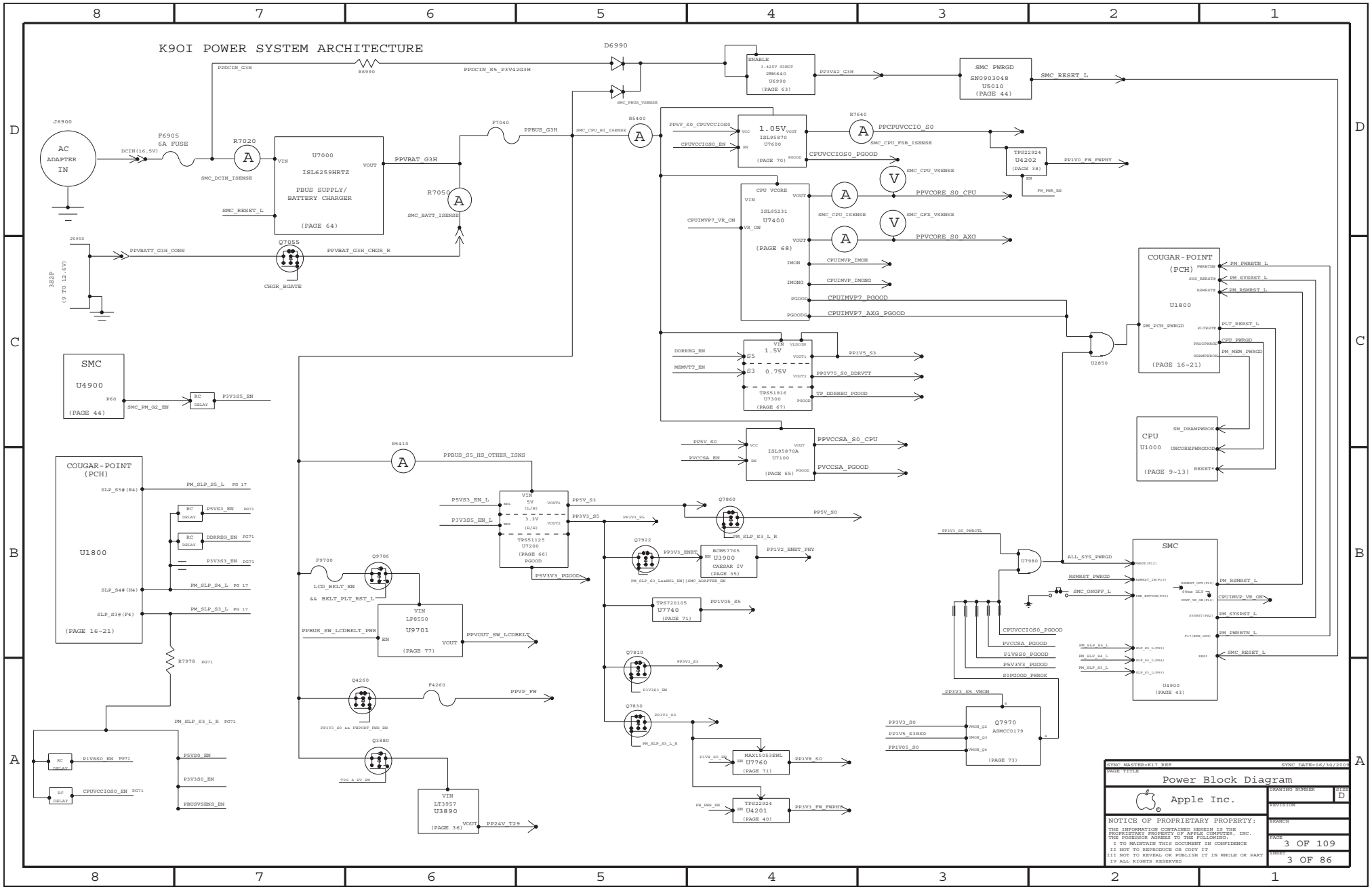
K90I POWER SYSTEM ARCHITECTURE
AC ADAPTER IN
J6900
DCIN(16.5V)
F6905 6A FUSE
R7020
SMC_DCIN_ISENSE
U7000
ISL6259HRTZ
PBUS SUPPLY/ BATTERY CHARGER
(PAGE 64)
PPVBAT_G3H
R7050
SMC_BATT_ISENSE
SMC_RESET_L
J6950
PPVBATT_G3H_CONN
Q7055
PPVBAT_G3H_CHGR_R
CHGR_BGATE
3S2P (9 TO 12.6V)
PPDCIN_G3H
R6990
PPDCIN_S5_P3V42G3H
D6990
SMC_PBUS_VSENSE
F7040
PPBUS_G3H
SMC_CPU_HI_ISENSE
R5400
ENABLE
3.425V G3HOT
PM6640
U6990
(PAGE 63)
PP3V42_G3H
SMC PWRGD
SN0903048
U5010
(PAGE 44)
SMC_RESET_L
PP5V_S0_CPUVCCIOS0
CPUVCCIOS0_EN
1.05V
ISL95870
U7600
(PAGE 70)
CPUVCCIOS0_PGOOD
R7640
PPCPUVCCIO_S0
SMC_CPU_FSB_ISENSE
TPS22924
U4202
(PAGE 38)
PP1V0_FW_FWPHY
FW_PWR_EN
SMC_CPU_VSENSE
CPU VCORE
ISL95231
U7400
(PAGE 68)
PPVCORE_S0_CPU
SMC_CPU_ISENSE
SMC_GFX_VSENSE
CPUIMVP7_VR_ON
PPVCORE_S0_AXG
CPUIMVP_IMON
CPUIMVP_IMONG
CPUIMVP7_PGOOD
CPUIMVP7_AXG_PGOOD
DDRREG_EN
MEMVTT_EN
1.5V
0.75V
TPS51916
U7300
(PAGE 67)
PP1V5_S3
PP0V75_S0_DDRVTT
TP_DDRREG_PGOOD
PP5V_S0
PVCCSA_EN
ISL95870A
U7100
(PAGE 65)
PPVCCSA_S0_CPU
PVCCSA_PGOOD
SMC
U4900
(PAGE 44)
SMC_PM_G2_EN
RC DELAY
P3V3S5_EN
COUGAR-POINT (PCH)
U1800
(PAGE 16~21)
PM_SLP_S5_L
P5V3S3_EN
DDRREG_EN
P3V3S3_EN
PM_SLP_S4_L
PM_SLP_S3_L
R7978
PM_SLP_S3_L_R
P1V8S0_EN
P5VS0_EN
P3V3S0_EN
PBUSVSENS_EN
CPUVCCIOS0_EN
R5410
PPBUS_S5_HS_OTHER_ISNS
P5VS3_EN_L
P3V3S5_EN_L
5V
3.3V
TPS51125
U7200
(PAGE 66)
PGOOD
PP5V_S3
PP3V3_S5
PP5V_S0
Q7860
PM_SLP_S3_L_R
Q7922
PP3V3_ENET_EN
BCM57765
U3900
CAESAR IV
(PAGE 35)
PP1V2_ENET_PHY
P5V3V3_PGOOD
F9700
Q9706
LCD_BKLT_EN
&& BKLT_PLT_RST_L
VIN
LP8550
U9701
(PAGE 77)
PPVOUT_SW_LCDBKLT
PPBUS_SW_LCDBKLT_PWR
TPS720105
U7740
(PAGE 71)
PP1V05_S5
Q7810
PP3V3_S3
P3V3S3_EN
Q7830
PP3V3_S0
PM_SLP_S3_L_R
Q4260
F4260
PPVP_FW
PP3V3_S0 && PWPORT_PWR_EN
Q3880
T29_A_HV_EN
VIN
LT3957
U3890
(PAGE 36)
PP24V_T29
MAX15053EWL
U7760
(PAGE 71)
PP1V8_S0
TPS22924
U4201
(PAGE 40)
PP3V3_FW_FWPHY
U2850
COUGAR-POINT (PCH)
U1800
(PAGE 16~21)
PM_PWRBTN_L
PM_SYSRST_L
PM_RSMRST_L
PLT_RERST_L
CPU_PWRGD
PM_MEM_PWRGD
CPU
U1000
(PAGE 9~13)
SM_DRAMPWROK
UNCOREPWRGOOD
RESET*
U7980
PP3V3_S5_PWRCTL
ALL_SYS_PWRGD
RSMRST_PWRGD
SMC_ONOFF_L
CPUIMVP_VR_ON
CPUVCCIOS0_PGOOD
PVCCSA_PGOOD
P1V8S0_PGOOD
P5V3V3_PGOOD
S0PGOOD_PWROK
PP3V3_S5_VMON
Q7970
ASMCC0179
(PAGE 73)
PP3V3_S0
PP1V5_S3RS0
PP1V05_S0
SMC
U4900
(PAGE 43)
SYNC MASTER=K17 REF
SYNC DATE=06/30/2009
PAGE TITLE
Power Block Diagram
Apple Inc.
DRAWING NUMBER
SIZE D
REVISION
BRANCH
PAGE 3 OF 109
SHEET 3 OF 86
NOTICE OF PROPRIETARY PROPERTY:
THE INFORMATION CONTAINED HEREIN IS THE PROPERTY OF APPLE COMPUTER, INC. THE POSESSOR AGREES TO THE FOLLOWING:
I TO MAINTAIN THIS DOCUMENT IN CONFIDENCE
II NOT TO REPRODUCE OR COPY IT
III NOT TO REVEAL OR PUBLISH IT IN WHOLE OR PART
IV ALL RIGHTS RESERVED

PBUS Voltage Sense Enable & Filter

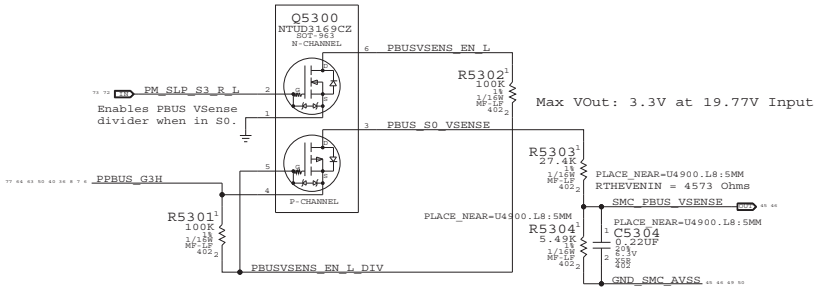

CPU VCore Load Side Current Sense / Filter

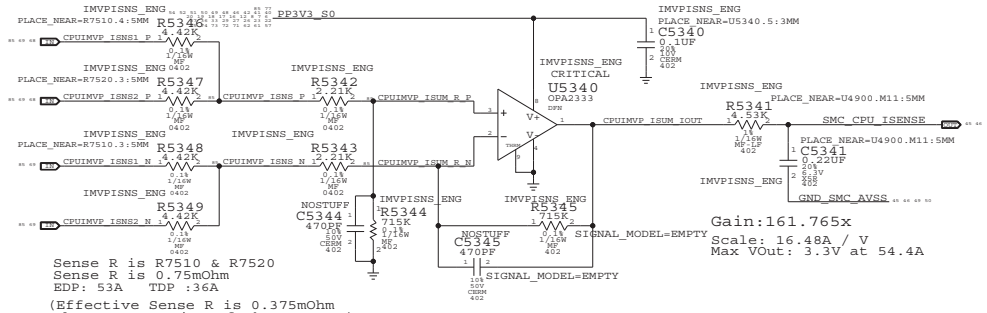

DC-In Voltage Sense Enable & Filter

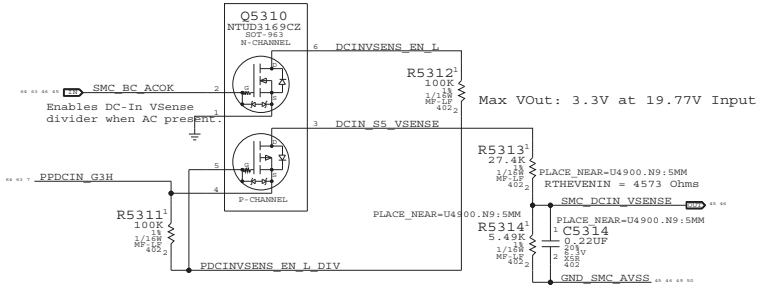

GFX/IG VCore Load Side Current Sense / Filter

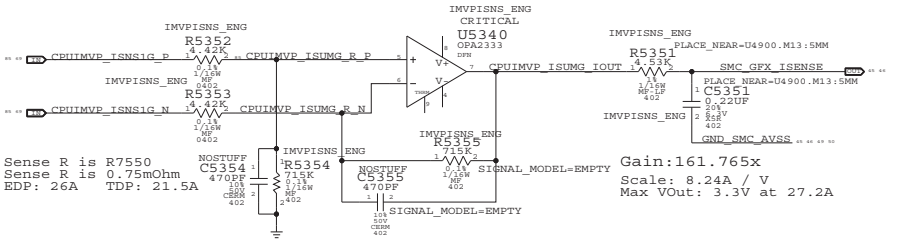

CPU Vcore Voltage Sense / Filter

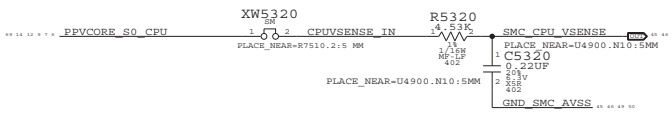

GFX/IG Vcore Voltage Sense / Filter

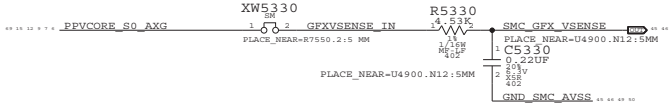

CPU 1.05V VCCIO Current Sense / Filter

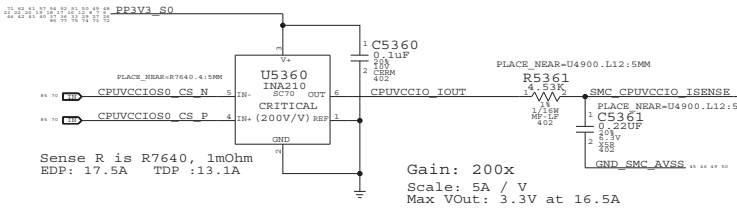

SYNC MASTER=LINDA K90I SYNC DATE=10/22/2010

PAGE TITLE

Voltage & Load Side Current Sensing

Apple Inc.

DRAWING NUMBER

SIZE D

REVISION

BRANCH

NOTICE OF PROPRIETARY PROPERTY:
THE INFORMATION CONTAINED HEREIN IS THE PROPERTY OF APPLE COMPUTER, INC. AND THE POSSESSOR AGREES TO THE FOLLOWING:
I TO MAINTAIN THIS DOCUMENT IN CONFIDENCE
II NOT TO REPRODUCE OR COPY IT
III NOT TO REVEAL OR PUBLISH IT IN WHOLE OR PART
IV ALL RIGHTS RESERVED

PAGE 53 OF 109

SHEET 49 OF 86

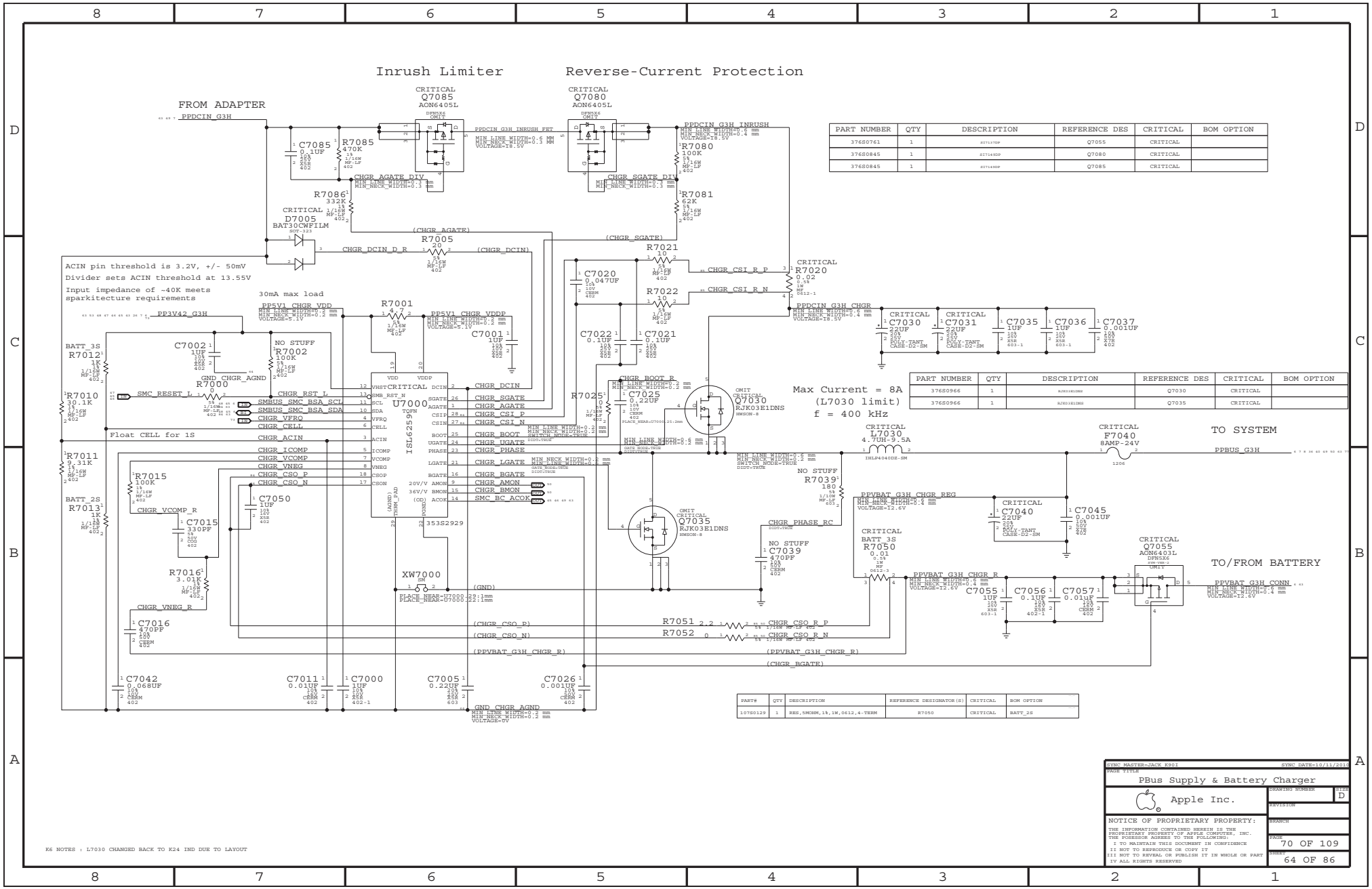

PART NUMBER	QTY	DESCRIPTION	REFERENCE DES	CRITICAL	BOM OPTION
376S0761	1	SI7137DP	Q7055	CRITICAL	
376S0845	1	SI7149DP	Q7080	CRITICAL	
376S0845	1	SI7149DP	Q7085	CRITICAL	

PART NUMBER	QTY	DESCRIPTION	REFERENCE DES	CRITICAL	BOM OPTION
376S0966	1	RJK03E1DNS	Q7030	CRITICAL	
376S0966	1	RJK03E1DNS	Q7035	CRITICAL	

PART#	QTY	DESCRIPTION	REFERENCE DESIGNATOR(S)	CRITICAL	BOM OPTION
107S0129	1	RES,5MOHM,1%,1W,0612,4-TERM	R7050	CRITICAL	BATT_2S

K6 NOTES : L7030 CHANGED BACK TO K24 IND DUE TO LAYOUT

SYNC MASTER=JACK K90I SYNC DATE=10/11/2013

PAGE TITLE

PBus Supply & Battery Charger

Apple Inc.

DRAWING NUMBER

SIZE D

REVISION

BRANCH

NOTICE OF PROPRIETARY PROPERTY:
THE INFORMATION CONTAINED HEREIN IS THE PROPERTY OF APPLE COMPUTER, INC. AND/OR, INC. THE POSESSOR AGREES TO THE FOLLOWING:
I TO MAINTAIN THIS DOCUMENT IN CONFIDENCE
II NOT TO REPRODUCE OR COPY IT
III NOT TO REVEAL OR PUBLISH IT IN WHOLE OR PART
IV ALL RIGHTS RESERVED