MagSafe DC Power Jack

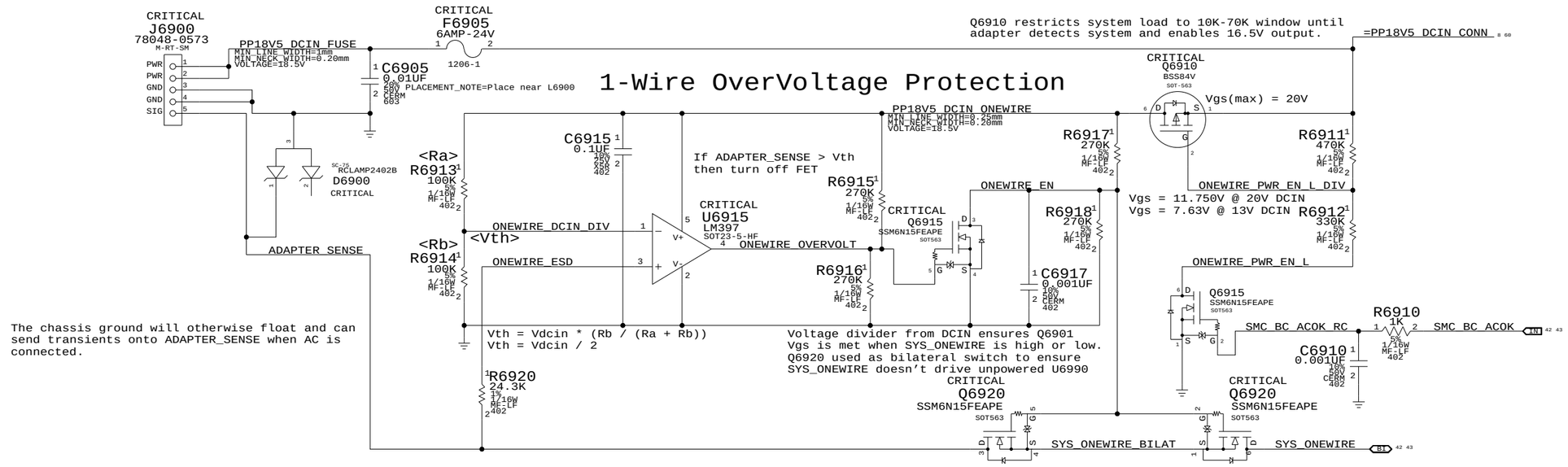

3.425V "G3Hot" Supply

Supply needs to guarantee 3.31V delivered to SMC VRef generator

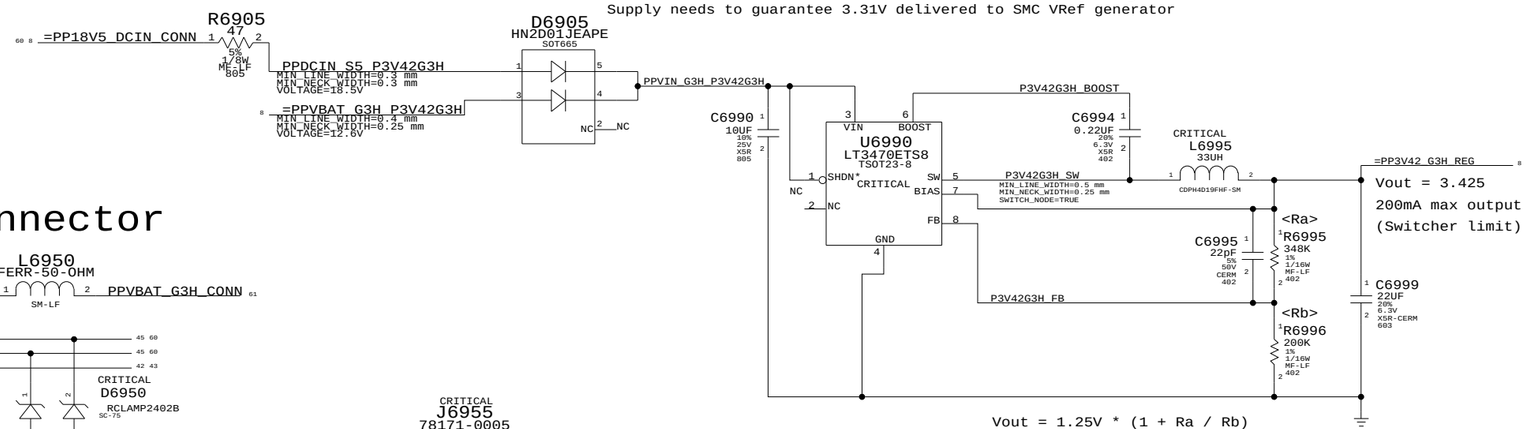

Battery Connector

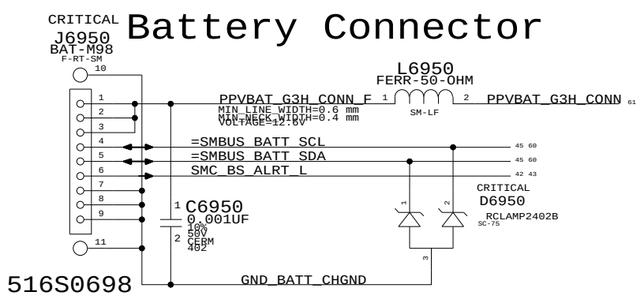

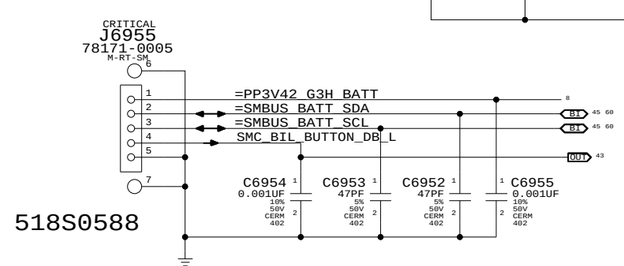

DC-In & Battery Connectors

SYNC_MASTER=T18_MLB SYNC_DATE=12/06/2007

NOTICE OF PROPRIETARY PROPERTY

THE INFORMATION CONTAINED HEREIN IS THE PROPRIETARY PROPERTY OF APPLE COMPUTER, INC. THE POSSESSOR AGREES TO THE FOLLOWING

I TO MAINTAIN THE DOCUMENT IN CONFIDENCE

II NOT TO REPRODUCE OR COPY IT

III NOT TO REVEAL OR PUBLISH IN WHOLE OR PART

APPLE INC.

SIZE	DRAWING NUMBER	REV.
D	051-7546	A.0.0
SCALE NONE	SHT 60 OF 96	